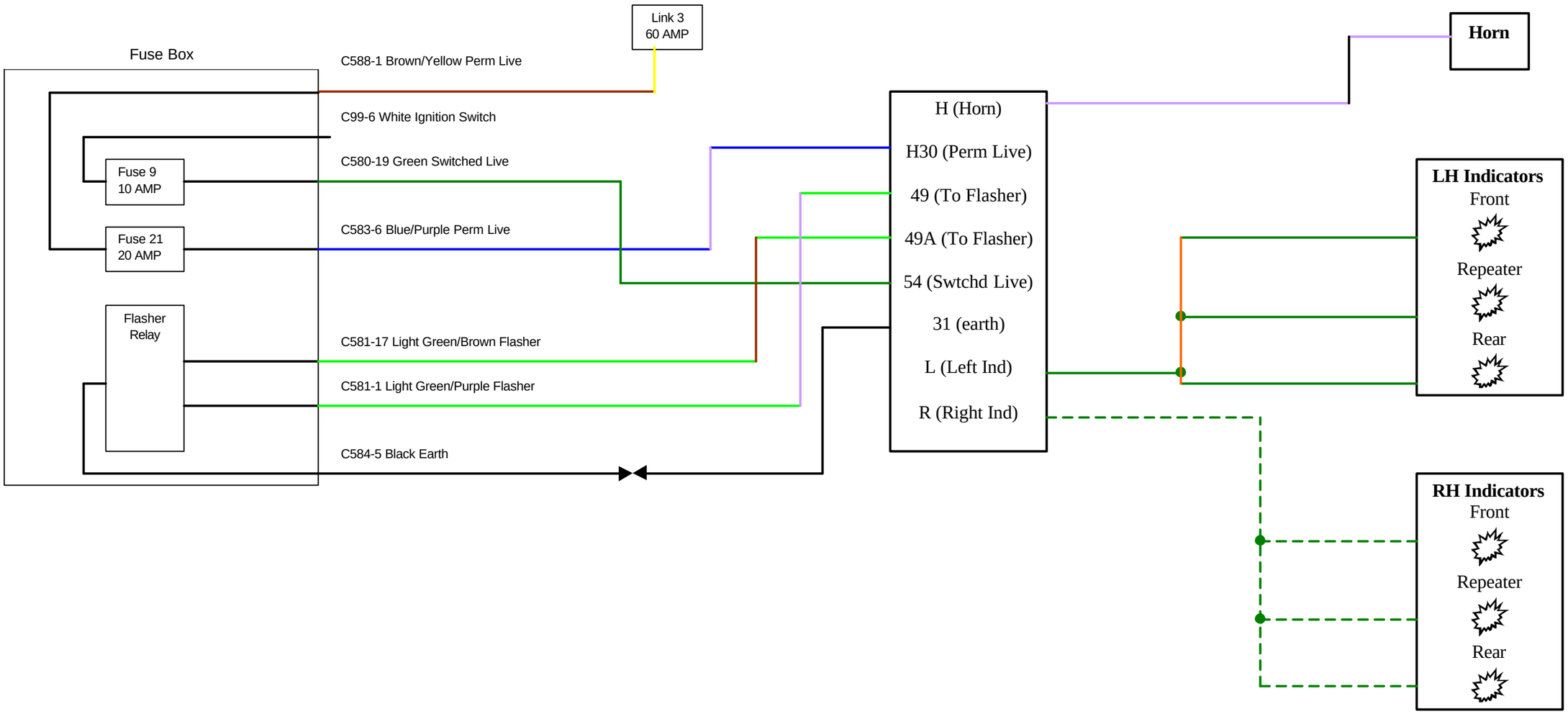Indicator/Hazards Wiring Diagram